GEL MATIC

MODEL: BV 250
CONDENSATION: AIR

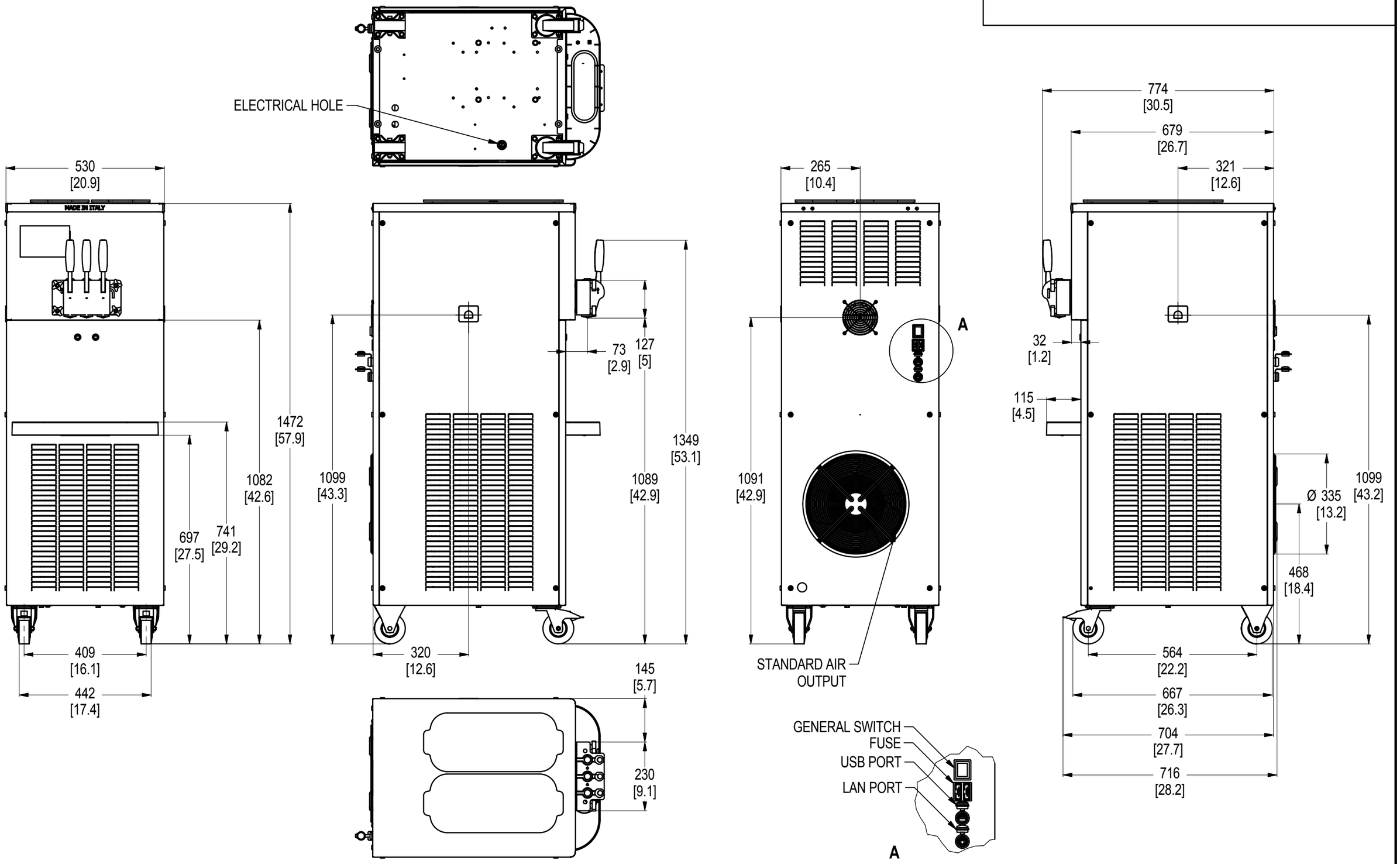

Gel Matic Italia S.r.l. - Via Zanica 6C 24050 Grassobbio (BG) - +39.035.525138 - info@gelmatic.com - www.gelmatic.com